LOGIC FUNCTIONS AND LOGIC GATES

<u>Logic function</u>

Consider the states which result from the statement:

It will snow (S) if the temperature is low (L) <u>and</u> it is cloudy (C).

Mathematically: **S = L AND C** or

inputs		output
L	C	S
x	x	x
x	✓	x
✓	x	x
✓	✓	✓

✓ = true (condition fulfilled); x = false (condition not fulfilled)

Logic function

Consider the states which result from the statement:

It will snow (S) if the temperature is low (L) <u>and</u> it is cloudy (C).

Mathematically: **S = L AND C** or

inputs		output
L	C	S
x	x	x
x	✓	x
✓	x	x
✓	✓	✓

true = 1
false = 0

inputs		output
L	C	S
0	0	0
0	1	0
1	0	0
1	1	1

✓ = true; x = false

1 = true; 0 = false

BOOLEAN ALGEBRA

Boolean algebra is a mathematical system that defines a series of logical operations performed on sets of variables. Regarding the digital circuits, the variables is limited to binary (0 and 1) set.

George Boole (1815 – 1864): English mathematician and philosopher, developed this algebra '*to give expression of fundamental laws of reasoning in the symbolic laws of calculus*'.

We would need a small set of basic (primitive) logic functions to perform any logical operation:

- Logical multiplication (AND)
- Logical addition (OR)
- Logical negation (NOT)

BOOLEAN ALGEBRA: AND function

AND – logical multiplication – represented with the same symbols as used for regular multiplication: ***** , **·** , **( )** , or no space.

Let x and y represent input binary variables, then their logical multiplication is written as:

z = x AND y or z = (xy) or z = xy or z = x*y or x · y, where z – is output of the logical multiplication (reads in all cases as 'z equals x and y').

Basic rules for AND:

- If all the inputs true, then output is true
- If at least one of the inputs is false, then output is false.

In short, AND provide an output 'true' when all of the input variables are 'true'.

All possible combinations are represented in this table:

'True' is commonly denoted by a 1 and 'false' by a 0.

Such tabular representation of inputs and outputs of logical function called **truth table**.

inputs		output
x	**y**	**z**
1	1	1
1	0	0
0	1	0
0	0	0

Note : input is not limited to just two variables – there might be unlimited number of inputs.

Exercise: build the truth table for four-input AND function: z= x AND y AND s AND p.

BOOLEAN ALGEBRA: OR function

OR – logical addition – represented with **+** symbol.

With x and y representing input binary variables, OR is written as:

z = x OR y or z = x + y (reads as ‘z equals x or y’).

Basic rules for OR:

- If either or all of the inputs is true, then output is true
- If all of the inputs is false, then output is false.

In short, OR provides an output 1 when any of the input variables is a 1.

-

Truth table for OR:

inputs		output
x	**y**	**z**
1	1	1
1	0	1
0	1	1
0	0	0

Note : input is not limited to two variables – there might be an unlimited number of logical inputs.

Exercise: build the truth table for four-input AND function: z= x AND y AND s AND p.

BOOLEAN ALGEBRA: NOT function

NOT – logical negation (complementation) function – represented with overbar ¯ or apostrophe ‘ symbols.

With x representing input binary variable, NOT is written as: z = y’ or $z = \overline{y}$ (reads as ‘z equals not y’ or ‘z equals y bar’).

Basic rule for NOT:

NOT inverts an input variable: if the input is 1, the output is 0 and vice versa.

In other words, NOT complements a variable.

Truth table for NOT:

input	output
y	**z**
1	0
0	1

Note : input is limited to one variable

BOOLEAN ALGEBRA: more functions

x	y	(xy)	x+y	$\overline{x}$	$\overline{(xy)}$	$\overline{(x+y)}$	...
0	0	0	0	1	1	1	
0	1	0	1	1	1	0	
1	0	0	1	0	1	0	
1	1	1	1	0	0	0	
		AND	**OR**	**NOT**	NAND	NOR	**...**

basic set

functions derived from basic set

AND, **OR** and **NOT** form a universal set of functions from which all other logic functions can be constructed.

Boolean algebra: Basic rules I

Variable operating upon itself:

$$x \cdot x = x \qquad x + x = x$$

Variable operating on its complement:

$$x \cdot \overline{x} = 0 \qquad x + \overline{x} = 1$$

Involution law: $\overline{\overline{x}} = x$

Operating on variable with 0 or 1:

$$x \cdot 0 = 0 \qquad x \cdot 1 = x$$

$$x + 0 = x \qquad x + 1 = 1$$

Try to understand these rules and then to remember via completing exercises.

Boolean algebra: Basic rules II

Commutative laws: order of operation under AND and OR is unimportant:

$$(xy) = (yx) \qquad x + y = y + x$$

Associative laws: show how variables are grouped together:

$$(xy)z = xyz = x(yz)$$

$$(x + y) + z = x + y + z = x + (y + z)$$

Distributive laws: show how to expand equations out:

$$x(y + z) = xy + xz \qquad x + (yz) = (x + y)(x + z)$$

Checking Distributive law with truth table

$$x + (yz) = (x + y)(x + z)$$

First, how to build a truth table for function with N inputs (variables):

(1) Count the number, N, of variables.

(2) Number of rows in the table is 2 in power N : 2^N.

(3) Write down all possible combinations of the input variables in the first N columns.

(4) All individual terms are done via step-by-step consideration.

Checking Distributive law with truth table

$$x + (yz) = (x + y)(x + z)$$

(1) Count the number, N, of variables: **3**

(2) Number of rows in the table is 2 in power N : 2^N.

(3) Write down all possible combinations of the input variables in the first N columns.

(4) All individual terms are done via step-by-step consideration.

Checking Distributive law with truth table

$$x + (yz) = (x + y)(x + z)$$

(1) Count the number, N, of variables: **3**

(2) Number of rows in the table is 2 in power N : **$2^3 = 8$**

(3) Write down all possible combinations of the input variables in the first N columns.

(4) All individual terms are done via step-by-step consideration.

$2^3 = 8$

Checking Distributive law with truth table

$$x + (yz) = (x + y)(x + z)$$

(1) Count the number, N, of variables: **3**

(2) Number of rows in the table is 2 in power N : $\mathbf{2^3 = 8}$

(3) Write down all possible combinations of the input variables in the first N columns.

(4) All individual terms are done via step-by-step consideration.

$2^3 = 8$

x	y	z	yz	$x + (yz)$	$x + y$	$x + z$	$(x + y)$ $(x + z)$
0	0	0					
0	0	1					
0	1	0					
0	1	1					
1	0	0					
1	0	1					
1	1	0					
1	1	1					

Checking Distributive law with truth table

$$x + (yz) = (x + y)(x + z)$$

(1) Count the number, N, of variables: **3**

(2) Number of rows in the table is 2 in power N : $\mathbf{2^3 = 8}$

(3) Write down all possible combinations of the input variables in the first N columns.

(4) All individual terms are done via step-by-step consideration.

$2^3 = 8$

x	y	z	yz	$x + (yz)$	$x + y$	$x + z$	$(x + y)$ $(x + z)$
0	0	0	0				
0	0	1	0				
0	1	0	0				
0	1	1	1				
1	0	0	0				
1	0	1	0				
1	1	0	0				
1	1	1	1				

Checking Distributive law with truth table

$$x + (yz) = (x + y)(x + z)$$

(1) Count the number, N, of variables: **3**

(2) Number of rows in the table is 2 in power N : $\mathbf{2^3 = 8}$

(3) Write down all possible combinations of the input variables in the first N columns.

(4) All individual terms are done via step-by-step consideration.

$2^3 = 8$

x	y	z	yz	$x + (yz)$	$x + y$	$x + z$	$(x + y)(x + z)$
0	0	0	0	0	0	0	0
0	0	1	0	0	0	1	0
0	1	0	0	0	1	0	0
0	1	1	1	1	1	1	1
1	0	0	0	1	1	1	1
1	0	1	0	1	1	1	1
1	1	0	0	1	1	1	1
1	1	1	1	1	1	1	1

Checking Distributive law with truth table

$$x + (yz) = (x + y)(x + z)$$

(1) Count the number, N, of variables: **3**

(2) Number of rows in the table is 2 in power N : $\mathbf{2^3 = 8}$

(3) Write down all possible combinations of the input variables in the first N columns.

(4) All individual terms are done via step-by-step cons

equal

$2^3 = 8$

x	y	z	yz	$x + (yz)$	$x + y$	$x + z$	$(x + y)(x + z)$
0	0	0	0	0	0	0	0
0	0	1	0	0	0	1	0
0	1	0	0	0	1	0	0
0	1	1	1	1	1	1	1
1	0	0	0	1	1	1	1
1	0	1	0	1	1	1	1
1	1	0	0	1	1	1	1
1	1	1	1	1	1	1	1

Truth table

Exercises:

1. Built the truth table for **D = AB + C** (see answer at the end of these lecture notes)
2. Verify the rule $x(y+z) = xy + xz$ with a truth table.

Boolean algebra: derived rules

Few more useful relations ...

$$x(x + y) = x$$

$$x + (xy) = x$$

$$x + (\overline{x} \cdot y) = x + y$$

Boolean algebra: derived rules

x(x + y) = x

Proof:

$x(x+y) = xx + xy$	by distributive law: $x(y+z) = xy + xz$
$= x \cdot 1 + xy$	by law $x \cdot x = x$ and $x \cdot 1 = x$
$= x(1+y)$	by distributive law
$= x \cdot 1$	by law $x + 1 = 1$
$= x$	by law $x \cdot 1 = x$

Boolean algebra: derived rules

$$x + (xy) = x$$

Proof: $x + (xy) = x(1 + y)$ by distributive law

$= x \cdot 1$ by law $x + 1 = 1$

$= x$ by law $x \cdot 1 = x$

$$x + (\overline{x} \cdot y) = x + y$$

Exercise: Derive the above rule using basic postulates and theorems and check it with the truth table.

Reduction of logic equations using Boolean algebra

Eliminate redundant terms in logical expression: F = xy'z + xyz .

By inspection of the two AND terms one can find that **xz** is common to both terms in **F**; therefore, by distribution : **xy'z + xyz = xz(y + y')**, also, **y + y' = 1**. Therefore: **F = xz** .

Lets check **xy'z + xyz = xz** equality with a truth table:

x	y	z	$xy'z$	xyz	$xy'z + xyz$	xz
0	0	0	0	0	0	0
0	0	1	0	0	0	0
0	1	0	0	0	0	0
0	1	1	0	0	0	0
1	0	0	0	0	0	0
1	0	1	1	0	1	1
1	1	0	0	0	0	0
1	1	1	0	1	1	1

$2^3 = 8$

total number of combinations of x, y, z

equal

Reduction of logic equations using Boolean algebra

Simplify the logical expression:

$$F = x'yz' + x'yz + xyz' + xyz \quad .$$

Comparing term 1 with term 2, one finds that the **x'y** group is common, thus by distribution:

$$x'y(z' + z) = x'y \cdot 1 = x'y \quad .$$

Comparing terms 3 and 4, we find that **xy** is common, thus:

$$xy(z + z') = xy$$

Putting results together gives $F = x'y + xy$.

Selecting a common group gives:

$$y(x' + x) = y$$

Therefore, original expression is reduced to $F = y$.

greatly simplified!

Note: This is why we need this Boolean algebra.

Boolean algebra: De Morgan's theorems

Any kind of algebra has its theorems ...

$$\overline{x+y} = \overline{x} \cdot \overline{y} \qquad \overline{x+y+z+\ldots} = \overline{x} \cdot \overline{y} \cdot \overline{z} \cdot \ldots$$

$$\overline{x \cdot y} = \overline{x} + \overline{y} \qquad \overline{x \cdot y \cdot z \cdot \ldots} = \overline{x} + \overline{y} + \overline{z} + \ldots$$

The complement of any logic function can be found by inverting each variable, replacing each AND with OR, and each OR with AND. The constants (if any) are replaced with their complements: 0 → 1 and 1 → 0.

Note: De Morgan's theorems is very powerful because of the way **they can handle an inversion**: 'break' it to simplify a logic expression or 'add' it to express a logic function in a different way.

De Morgan's theorem in truth table

$$\overline{x+y} = \bar{x} \cdot \bar{y}$$

equal

x	y	$\bar{x}$	$\bar{y}$	$x+y$	$\overline{x+y}$	$\bar{x} \cdot \bar{y}$
0	0	1	1	0	1	1
0	1	1	0	1	0	0
1	0	0	1	1	0	0
1	1	0	0	1	0	0

Exercise: check the second De Morgan's theorem with the truth table:

$$\overline{x \cdot y} = \bar{x} + \bar{y}$$

Applying De Morgan's theorems: Forward

Formal way of doing it ...

$$D = AC + \overline{B}C + \overline{A}(\overline{B} + BC)$$

Solution First, we replace each variable by its inverse, resulting in the expression

$$\overline{A}\,\overline{C} + B\overline{C} + A(B + \overline{B}\,\overline{C})$$

Then, we replace the AND operation by OR, and vice versa:

$$(\overline{A} + \overline{C})(B + \overline{C})[A + B(\overline{B} + \overline{C})]$$

Finally, inverting the expression, we can write

$$D = \overline{(\overline{A} + \overline{C})(B + \overline{C})[A + B(\overline{B} + \overline{C})]}$$

Applying De Morgan's theorems: Reverse

Reversing from the complement ...

$$\overline{\overline{A + B\overline{\overline{C}}} + D(\overline{E + \overline{\overline{F}}})}$$

Step 1. Identify the terms to which you can apply DeMorgan's theorems, and think of each term as a single variable. Let $\overline{A + B\overline{\overline{C}}} = X$ and $D(\overline{E + \overline{\overline{F}}}) = Y$

Step 2. Since $\overline{X + Y} = \overline{X}\,\overline{Y}$,

$$\overline{\overline{[A + B\overline{\overline{C}}]} + \overline{[D(E + \overline{\overline{F}})]}} = \overline{\overline{[A + B\overline{\overline{C}}]}}\,\overline{[D(\overline{E + \overline{\overline{F}}})]}$$

Step 3. Use rule $(\overline{\overline{A}} = A)$ to cancel the double bars over the left term (this is not part of DeMorgan's theorem):

$$\overline{\overline{[A + B\overline{\overline{C}}]}}\,\overline{[D(\overline{E + \overline{\overline{F}}})]} = [A + B\overline{C}]\,\overline{[D(\overline{E + \overline{\overline{F}}})]}$$

Step 4. In the right term, let $Z = \overline{E + \overline{\overline{F}}}$.

$$[A + B\overline{C}]\,\overline{[D(\overline{E + \overline{\overline{F}}})]} = [A + B\overline{C}]\,[\overline{DZ}]$$

Step 5. Since $\overline{DZ} = \overline{D} + \overline{Z}$,

$$[A + B\overline{C}]\,\overline{[D(\overline{E + \overline{\overline{F}}})]} = (A + B\overline{C})(\overline{D} + \overline{(\overline{E + \overline{\overline{F}}})})$$

Step 6. Use rule $(\overline{\overline{A}} = A)$ to cancel the double bars over the $E + \overline{\overline{F}}$ part of the term:

$$(A + B\overline{C})(\overline{D} + \overline{\overline{E + \overline{\overline{F}}}}) = (A + B\overline{C})(\overline{D} + E + \overline{\overline{F}})$$

Applying De Morgan's theorems

Reversing from the complement ...

$$\overline{\overline{A + B\overline{\overline{C}}} + D(\overline{E + \overline{\overline{F}}})}$$

Step 1. Identify the terms to which you can apply DeMorgan's theorems, and think of each term as a single variable. Let $\overline{A + B\overline{\overline{C}}} = X$ and $D(\overline{E + \overline{\overline{F}}}) = Y$

Step 2. Since $\overline{X + Y} = \overline{X}\,\overline{Y}$,

$$\overline{\overline{[A + B\overline{\overline{C}}] + [D(\overline{E + \overline{\overline{F}}})]}} = \overline{\overline{[A + B\overline{\overline{C}}]}}\,\overline{[D(\overline{E + \overline{\overline{F}}})]}$$

Step 3. Use rule $(\overline{\overline{A}} = A)$ to cancel the double bars over the left term (this is not part of DeMorgan's theorem):

$$\overline{\overline{[A + B\overline{\overline{C}}]}}\,\overline{[D(\overline{E + \overline{\overline{F}}})]} = [A + B\overline{C}]\,\overline{[D(\overline{E + \overline{\overline{F}}})]}$$

Step 4. In the right term, let $Z = \overline{E + \overline{\overline{F}}}$.

$$[A + B\overline{C}]\,\overline{[D(\overline{E + \overline{\overline{F}}})]} = [A + B\overline{C}]\,[\overline{DZ}]$$

Step 5. Since $\overline{DZ} = \overline{D} + \overline{Z}$,

$$[A + B\overline{C}]\,\overline{[D(\overline{E + \overline{\overline{F}}})]} = (A + B\overline{C})(\overline{D} + \overline{\overline{(E + \overline{\overline{F}})}})$$

Step 6. Use rule $(\overline{\overline{A}} = A)$ to cancel the double bars over the $E + \overline{\overline{F}}$ part of the term:

$$(A + B\overline{C})(\overline{D} + \overline{\overline{E + \overline{\overline{F}}}}) = (A + B\overline{C})(\overline{D} + E + \overline{\overline{F}})$$

Applying De Morgan's theorems

Reversing from the complement ...

$$\overline{\overline{A + B\overline{\overline{C}}} + D(\overline{E + \overline{\overline{F}}})}$$

Step 1. Identify the terms to which you can apply DeMorgan's theorems, and think of each term as a single variable. Let $\overline{A + B\overline{\overline{C}}} = X$ and $D(\overline{E + \overline{\overline{F}}}) = Y$

Step 2. Since $\overline{X + Y} = \overline{X}\,\overline{Y}$,

$$\overline{\overline{[A + B\overline{\overline{C}}]} + \overline{[D(E + \overline{\overline{F}})]}} = \overline{\overline{[A + B\overline{\overline{C}}]}}\,\overline{[D(E + \overline{\overline{F}})]}$$

Step 3. Use rule $(\overline{\overline{A}} = A)$ to cancel the double bars over the left term (this is not part of DeMorgan's theorem):

$$\overline{\overline{[A + B\overline{\overline{C}}]}}\,\overline{[D(E + \overline{\overline{F}})]} = [A + B\overline{C}]\,\overline{[D(E + \overline{\overline{F}})]}$$

Step 4. In the right term, let $Z = \overline{E + \overline{\overline{F}}}$.

$$[A + B\overline{C}]\,\overline{[D(E + \overline{\overline{F}})]} = [A + B\overline{C}]\,[\overline{DZ}]$$

Step 5. Since $\overline{DZ} = \overline{D} + \overline{Z}$,

$$[A + B\overline{C}]\,\overline{[D(E + \overline{\overline{F}})]} = (A + B\overline{C})(\overline{D} + \overline{(E + \overline{\overline{F}})})$$

Step 6. Use rule $(\overline{\overline{A}} = A)$ to cancel the double bars over the $E + \overline{\overline{F}}$ part of the term:

$$(A + B\overline{C})(\overline{D} + \overline{\overline{E + \overline{\overline{F}}}}) = (A + B\overline{C})(\overline{D} + E + \overline{\overline{F}})$$

Applying De Morgan's theorems

Reversing from the complement ...

$$\overline{\overline{A + B\overline{\overline{C}}} + D(\overline{E + \overline{\overline{F}}})}$$

Step 1. Identify the terms to which you can apply DeMorgan's theorems, and think of each term as a single variable. Let $\overline{A + B\overline{\overline{C}}} = X$ and $D(\overline{E + \overline{\overline{F}}}) = Y$

Step 2. Since $\overline{X + Y} = \overline{X}\,\overline{Y}$,

$$\overline{\overline{[A + B\overline{\overline{C}}]} + \overline{[D(E + \overline{\overline{F}})]}} = \overline{\overline{[A + B\overline{\overline{C}}]}}\,\overline{[D(\overline{E + \overline{\overline{F}}})]}$$

Step 3. Use rule $(\overline{\overline{A}} = A)$ to cancel the double bars over the left term (this is not part of DeMorgan's theorem):

$$\overline{\overline{[A + B\overline{\overline{C}}]}}\,\overline{[D(\overline{E + \overline{\overline{F}}})]} = [A + B\overline{C}]\,\overline{[D(\overline{E + \overline{\overline{F}}})]}$$

Step 4. In the right term, let $Z = \overline{E + \overline{\overline{F}}}$.

$$[A + B\overline{C}]\,\overline{[D(\overline{E + \overline{\overline{F}}})]} = [A + B\overline{C}]\,[\overline{DZ}]$$

Step 5. Since $\overline{DZ} = \overline{D} + \overline{Z}$,

$$[A + B\overline{C}]\,\overline{[D(\overline{E + \overline{\overline{F}}})]} = (A + B\overline{C})(\overline{D} + \overline{(\overline{E + \overline{\overline{F}}})})$$

Step 6. Use rule $(\overline{\overline{A}} = A)$ to cancel the double bars over the $E + \overline{\overline{F}}$ part of the term:

$$(A + B\overline{C})(\overline{D} + \overline{\overline{E + \overline{\overline{F}}}}) = (A + B\overline{C})(\overline{D} + E + \overline{\overline{F}})$$

Applying De Morgan's theorems

Reversing from the complement ...

$$\overline{\overline{A + B\overline{\overline{C}}} + D(\overline{E + \overline{\overline{F}}})}$$

Step 1. Identify the terms to which you can apply DeMorgan's theorems, and think of each term as a single variable. Let $\overline{A + B\overline{\overline{C}}} = X$ and $D(\overline{E + \overline{\overline{F}}}) = Y$

Step 2. Since $\overline{X + Y} = \overline{X}\,\overline{Y}$,

$$\overline{\overline{[A + B\overline{\overline{C}}]} + \overline{[D(E + \overline{\overline{F}})]}} = \overline{\overline{[A + B\overline{\overline{C}}]}}\,\overline{\overline{[D(E + \overline{\overline{F}})]}}$$

Step 3. Use rule $(\overline{\overline{A}} = A)$ to cancel the double bars over the left term (this is not part of DeMorgan's theorem):

$$\overline{\overline{[A + B\overline{\overline{C}}]}}\,\overline{\overline{[D(E + \overline{\overline{F}})]}} = [A + B\overline{C}]\,\overline{\overline{[D(E + \overline{\overline{F}})]}}$$

Step 4. In the right term, let $Z = \overline{E + \overline{\overline{F}}}$.

$$[A + B\overline{C}]\,\overline{\overline{[D(E + \overline{\overline{F}})]}} = [A + B\overline{C}]\,[\overline{DZ}]$$

Step 5. Since $\overline{DZ} = \overline{D} + \overline{Z}$,

$$[A + B\overline{C}]\,\overline{\overline{[D(E + \overline{\overline{F}})]}} = (A + B\overline{C})(\overline{D} + \overline{\overline{(E + \overline{\overline{F}})}})$$

Step 6. Use rule $(\overline{\overline{A}} = A)$ to cancel the double bars over the $E + \overline{\overline{F}}$ part of the term:

$$(A + B\overline{C})(\overline{D} + \overline{\overline{E + \overline{\overline{F}}}}) = (A + B\overline{C})(\overline{D} + E + \overline{\overline{F}})$$

Applying De Morgan's theorems

Reversing from the complement ...

$$\overline{\overline{A + B\overline{\overline{C}}} + D(\overline{E + \overline{\overline{F}}})}$$

Step 1. Identify the terms to which you can apply DeMorgan's theorems, and think of each term as a single variable. Let $\overline{A + B\overline{\overline{C}}} = X$ and $D(\overline{E + \overline{\overline{F}}}) = Y$

Step 2. Since $\overline{X + Y} = \overline{X}\,\overline{Y}$,

$$\overline{\overline{[A + B\overline{\overline{C}}]} + \overline{[D(E + \overline{\overline{F}})]}} = \overline{\overline{[A + B\overline{\overline{C}}]}}\,\overline{[D(\overline{E + \overline{\overline{F}}})]}$$

Step 3. Use rule $(\overline{\overline{A}} = A)$ to cancel the double bars over the left term (this is not part of DeMorgan's theorem):

$$\overline{\overline{[A + B\overline{\overline{C}}]}}\,\overline{[D(\overline{E + \overline{\overline{F}}})]} = [A + B\overline{C}]\,\overline{[D(\overline{E + \overline{\overline{F}}})]}$$

Step 4. In the right term, let $Z = \overline{E + \overline{\overline{F}}}$.

$$[A + B\overline{C}]\,\overline{[D(\overline{E + \overline{\overline{F}}})]} = [A + B\overline{C}]\,[\overline{DZ}]$$

Step 5. Since $\overline{DZ} = \overline{D} + \overline{Z}$,

$$[A + B\overline{C}]\,\overline{[D(\overline{E + \overline{\overline{F}}})]} = (A + B\overline{C})(\overline{D} + \overline{(\overline{E + \overline{\overline{F}}})})$$

Step 6. Use rule $(\overline{\overline{A}} = A)$ to cancel the double bars over the $E + \overline{\overline{F}}$ part of the term:

$$(A + B\overline{C})(\overline{D} + \overline{\overline{E + \overline{\overline{F}}}}) = (A + B\overline{C})(\overline{D} + E + \overline{\overline{F}})$$

Applying De Morgan's theorems

Reversing from the complement ...

$$\overline{\overline{A + B\overline{\overline{C}}} + D(\overline{E + \overline{\overline{F}}})}$$

Step 1. Identify the terms to which you can apply DeMorgan's theorems, and think of each term as a single variable. Let $\overline{A + B\overline{\overline{C}}} = X$ and $D(\overline{E + \overline{\overline{F}}}) = Y$

Step 2. Since $\overline{X + Y} = \overline{X}\,\overline{Y}$,

$$\overline{\overline{A + B\overline{\overline{C}}}} + \overline{D(\overline{E + \overline{\overline{F}}})} = \overline{\overline{A + B\overline{\overline{C}}}}\,\overline{D(\overline{E + \overline{\overline{F}}})}$$

Step 3. Use rule $(\overline{\overline{A}} = A)$ to cancel the double bars over the left term (this is not part of DeMorgan's theorem):

$$\overline{\overline{A + B\overline{\overline{C}}}}\,\overline{D(\overline{E + \overline{\overline{F}}})} = [A + B\overline{C}]\overline{D(\overline{E + \overline{\overline{F}}})}$$

Step 4. In the right term, let $Z = \overline{E + \overline{\overline{F}}}$.

$$[A + B\overline{C}]\overline{D(\overline{E + \overline{\overline{F}}})} = [A + B\overline{C}]\overline{DZ}$$

Step 5. Since $\overline{DZ} = \overline{D} + \overline{Z}$,

$$[A + B\overline{C}]\overline{D(\overline{E + \overline{\overline{F}}})} = (A + B\overline{C})(\overline{D} + \overline{\overline{E + \overline{\overline{F}}}})$$

Step 6. Use rule $(\overline{\overline{A}} = A)$ to cancel the double bars over the $E + \overline{F}$ part of the term:

$$(A + B\overline{C})(\overline{D} + \overline{\overline{E + \overline{\overline{F}}}}) = (A + B\overline{C})(\overline{D} + E + \overline{F})$$

total (and long) complements are removed

Applying De Morgan's theorems

Exercises: apply De Morgan's theorems to find an alternative form for the following expressions:

(a) $\overline{(A + B + C)D}$ **(b)** $\overline{ABC + DEF}$ **(c)** $\overline{A\overline{B} + \overline{C}D + EF}$

Answers:

(a) $\overline{A}\,\overline{B}\,\overline{C} + \overline{D}$

(b) $(\overline{A} + \overline{B} + \overline{C})(\overline{D} + \overline{E} + \overline{F})$

(c) $(\overline{A} + B)(C + \overline{D})(\overline{E} + \overline{F})$

Reduction of logic equations using Boolean algebra

Exercises: Reduce the following logic expressions

1. F = a’b + ab
2. W = abc’ + abc
3. Q = a’bc + a’b’c + a’b’c’ + abc
4. R = (x’ + y’)’(x + y’)
5. S = ab + a’b + ab’ + a’b’
6. P = (AB’(C + BD) + A’B’)C
7. V = (AB + AC)’ + A’B’C

More exercised are available in the recommended textbooks.

The answers:

1. F = b
2. W = ab
3. Q = a’b’ + bc
4. R = xy
5. S = 1
6. P = B’C
7. V = A’ + B’C’

Logical operations in digital circuits

DIGITAL LOGIC SYSTEM: electronic circuit performing logical operations on binary data.

GATES*: elementary circuits which carry out basic logic functions (AND, OR, NOT).

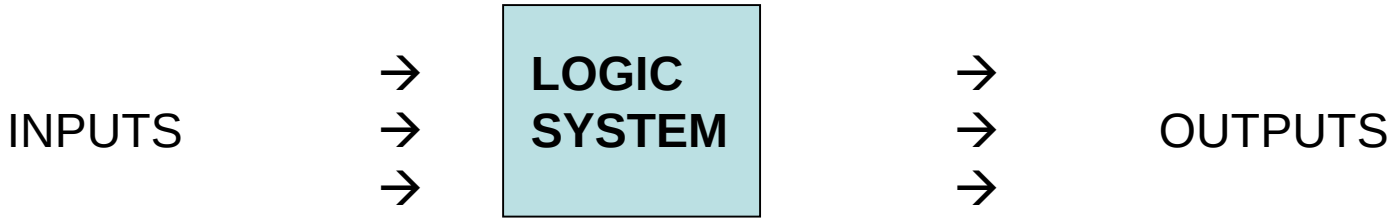

In digital circuits, “1” is realised with high voltage levels – HIGH (or ON) and “0” is associated with low voltage level – LOW (or OFF)

In reality, gates are available in groups (10-10000) integrated on one microchip.

**Note*: gates are not identical to basic electronic components such as resistor, capacitor, transistor etc. – they have more complex schematics.

Graphical symbols for gates

AND

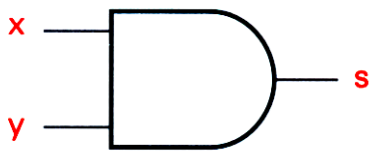

$s = (xy)$

OR

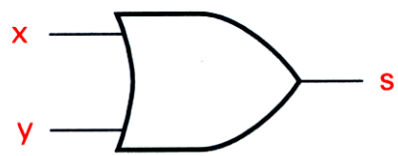

$s = x + y$

NOT

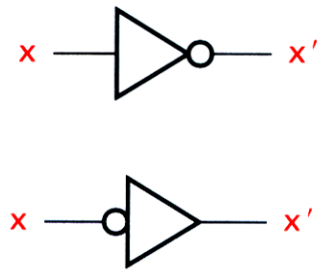

NAND

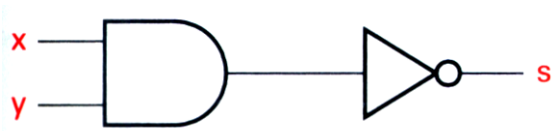

$s = (xy)'$ or $s = \overline{xy}$

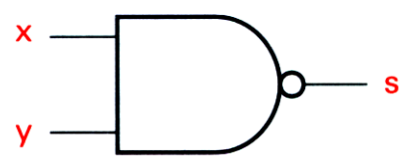

$s = (xy)'$ or $s = \overline{xy}$

NOR

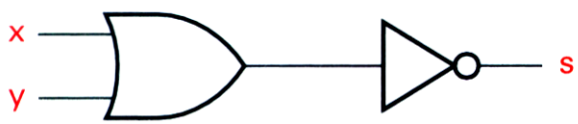

$s = (x + y)'$ or $s = \overline{x + y}$

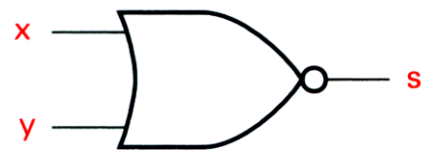

$s = (x + y)'$ or $s = \overline{x + y}$

Building diagram from logic equation

$$(x+y)\overline{(xy)}$$

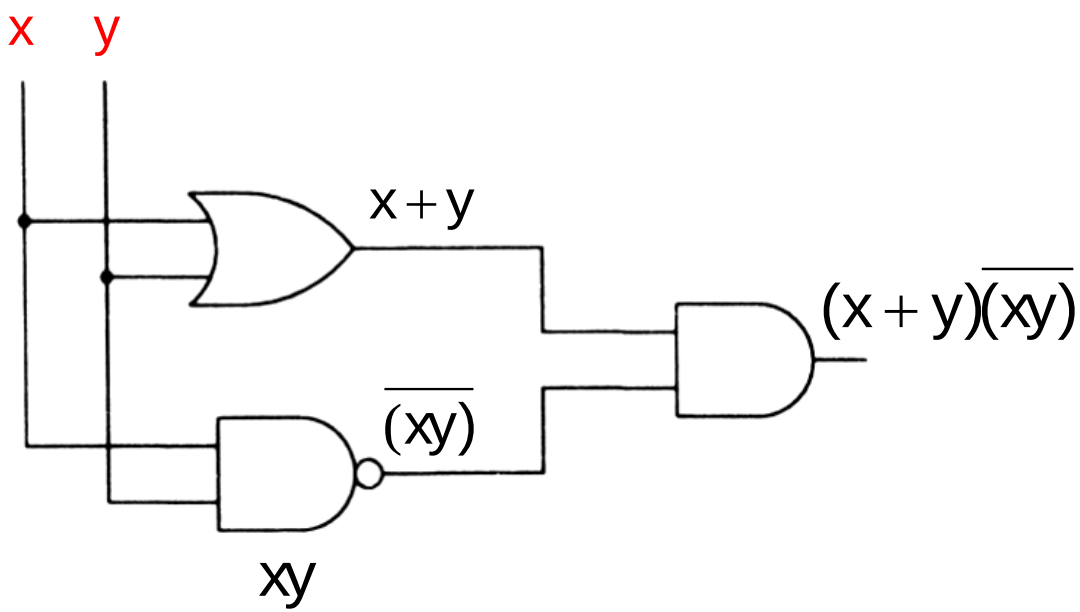

Exercise: simplify the above logic function (tip: apply De Morgan's theorem first) and build a diagram for the simplified version. Use truth table to verify the result.

Deriving logic equation from a diagram

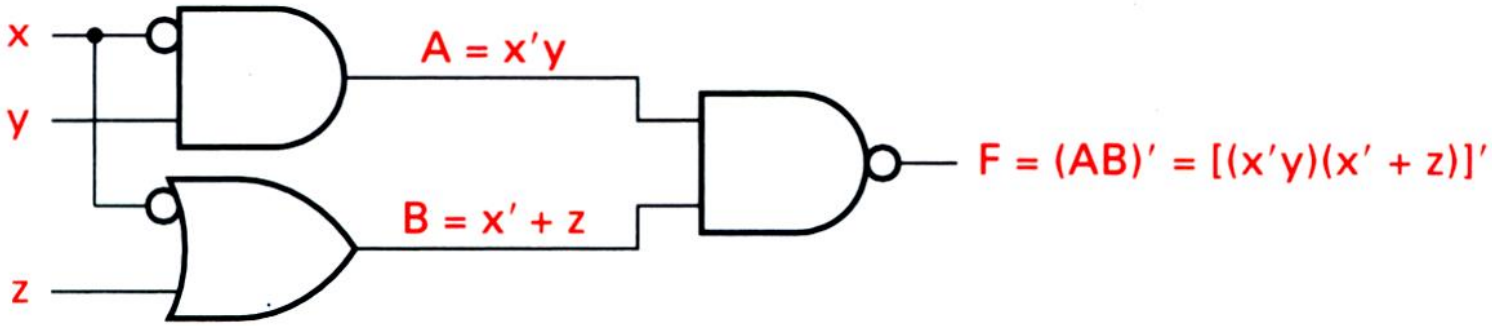

Function **F = [(x'y)(x' + z)]'** describes the logic output but it is not in an easy understandable form. Removing the complement would simplify it.

- Let **x'y = A**, and **x' + z = B**. Then **F = (AB)'** and by De Morgan's theorem

F = (AB)' = A' + B', or **F = (x'y)' + (x' + z)'**

- Further application of De Morgan's theorem will remove complement from each of the two terms : **(x'y)' = x + y'** → **(x' + z)' = xz'** , thus **F = x + y' +xz'**

  - Grouping terms with **x** allows reducing number of terms to two: **F = x + y'**

Deriving logic equation from a diagram

The truth table allows to check whether the circuit is performing as supposed.

F = x + y' +xz' = x + y'

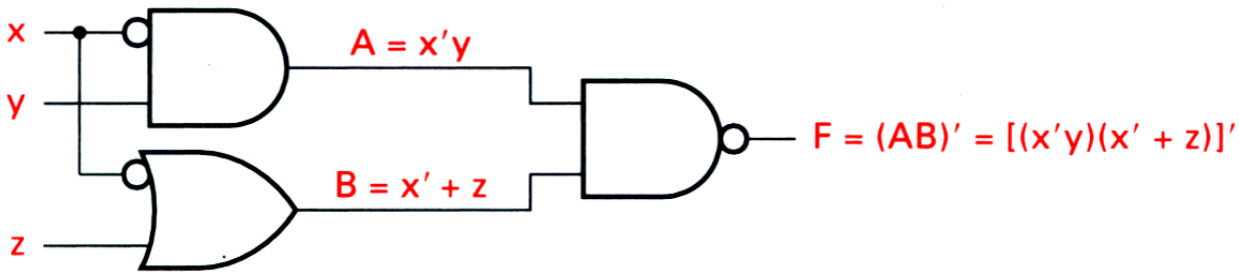

equal

x	y	z	xz'	$x + y'$	F
0	0	0	0	1	1
0	0	1	0	1	1
0	1	0	0	0	0
0	1	1	0	0	0
1	0	0	1	1	1
1	0	1	0	1	1
1	1	0	1	1	1
1	1	1	0	1	1

Summary

- Basic logic functions can be presented with truth tables and diagram symbols.
- Postulates and theorems of Boolean algebra allows manipulating with logic functions (see collection of logic postulates and theorems on the next slide).
- Logic equations can be simplified (reduced) using the postulates and theorems of Boolean algebra.
- Logic equations can be converted to logic diagrams and can be revived from logic diagrams.

Boolean algebra

Expression	Postulate or theorem
$x + 1 = 1$	
$x0 = 0$	
$x1 = x$	Identity
$x + 0 = x$	Identity
$xx' = 0$	Complement
$x + x' = 1$	Complement
$x'' = x$	Involution or double complement
$x + x = x$	Idempotence
$xx = x$	Idempotence
$xy = yx$	Commutative
$x + y = y + x$	Commutative
$x(y + z) = xy + xz$	Distributive
$x + (yz) = (x + y)(x + z)$	Distributive
$x(yz) = (xy)z$	Associative
$x + (y + z) = (x + y) + z$	Associative
$x + xy = x$	Absorption
$x(x + y) = x$	Absorption
$x(x' + y) = xy$	Absorption
$x'y' = (x + y)'$	DeMorgan
$(xy)' = x' + y'$	DeMorgan
$xy + xy' = x$	Adjacency

Answer for the Truth table exercise

A	B	C	AB	$D = AB + C$
0	0	0	0	0
0	0	1	0	1
0	1	0	0	0
0	1	1	0	1
1	0	0	0	0
1	0	1	0	1
1	1	0	1	1
1	1	1	1	1

Solutions for the De Morgan's theorems exercise

Apply DeMorgan's theorems to each of the following expressions:

(a) $\overline{(A + B + C)D}$ **(b)** $\overline{ABC + DEF}$ **(c)** $\overline{A\overline{B} + \overline{C}D + EF}$

Solution

(a) Let $A + B + C = X$ and $D = Y$. The expression $\overline{(A + B + C)D}$ is of the form $\overline{XY} = \overline{X} + \overline{Y}$ and can be rewritten as

$$\overline{(A + B + C)D} = \overline{A + B + C} + \overline{D}$$

Next, apply DeMorgan's theorem to the term $\overline{A + B + C}$:

$$\overline{A + B + C} + \overline{D} = \overline{A}\,\overline{B}\,\overline{C} + \overline{D}$$

(b) Let $ABC = X$ and $DEF = Y$. The expression $\overline{ABC + DEF}$ is of the form $\overline{X + Y} = \overline{X}\,\overline{Y}$ and can be rewritten as

$$\overline{ABC + DEF} = (\overline{ABC})(\overline{DEF})$$

Next, apply DeMorgan's theorem to each of the terms $\overline{ABC}$ and $\overline{DEF}$:

$$(\overline{ABC})(\overline{DEF}) = (\overline{A} + \overline{B} + \overline{C})(\overline{D} + \overline{E} + \overline{F})$$

(c) Let $A\overline{B} = X$, $\overline{C}D = Y$, and $EF = Z$. The expression $\overline{A\overline{B} + \overline{C}D + EF}$ is of the form $\overline{X + Y + Z} = \overline{X}\,\overline{Y}\,\overline{Z}$ and can be rewritten as

$$\overline{A\overline{B} + \overline{C}D + EF} = (\overline{A\overline{B}})(\overline{\overline{C}D})(\overline{EF})$$

Next, apply DeMorgan's theorem to each of the terms $\overline{A\overline{B}}$, $\overline{\overline{C}D}$, and $\overline{EF}$:

$$(\overline{A\overline{B}})(\overline{\overline{C}D})(\overline{EF}) = (\overline{A} + B)(C + \overline{D})(\overline{E} + \overline{F})$$

- Please take these notes with you next time

- Please complete the enclosed exercises this week , ideally today.